RIGHTWAY ASIA

# INOX | Upright Cabinets

REFRIGERATED CABINETS ▶ GN2/1-NO FROST ▶ FREEZER

# QNM 6

GAS R290 | 80 mm | 4 CLIMATIC CLASS | 36°C | LED

## DETAILS

The items can be supplied either with adjustable feet or lockable castor

Evaporator with anti-corrosion treatment

Inner stainless steel waved guides

Anti-condensation "thermal-braker" on door frame

Lock fitted as standard

Digital control and white backlit main switch

Inner LED light

Cabinet suitable for GN2/1 pans

## General features

| | |
|---|---|
| GN2/1 Freezer upright cabinet (SPLIT DOOR) | • |
| Stainless Steel exterior and interior | • |
| Plastic thermal-braker as chamber body frame (Heated) | • |
| Ventilated Cooling | • |
| Evaporator with anti-corrosion treatment | • |
| Hot gas defrost system | • |
| Foaming Agent Cyclopentane (80mm) | • |
| Curved edge for easy cleaning | • |
| Digital Thermostat | • |
| White backlit main switch | • |
| LED light and lock fitted as standard | • |
| Removable Gasket | • |
| Door: Self closing and reversible door fitted as standard | • |
| Foamed door handle | • |
| Adjustable shelves GN2/1: 3 + 1 | • |
| N.4 S/S Adjustable feet - (Lockable castor as Optional) | • |
| Energy efficiency class: D | • |

## PRODUCT DIMENSIONS

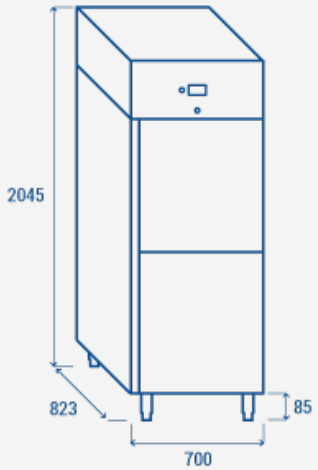


## Technical specifications

| | |
|---|---|
| Capacity | **546 L** |
| Temperature | **-18° ~ -22°C** |
| Consumption | **6.46 kWh/24h** |
| Rated Power | **319 W** |
| Noise level | **50 dB(A)** |
| Net Weight | **108.00 Kg** |
| Gross Weight | **121.00 Kg** |
| External Dimensions (WxDxH mm) | **700x823x2045** |
| Internal Dimensions (WxDxH mm) | **534x685x1485** |
| Packaging dimensions (WxDxH mm) | **720x840x2110** |
| Loading quantities 20'/40'/40'HQ | **21/44/44** |

## CERTIFICATION

CE RoHS

RIGHTWAY ASIA
We make the world a cooler place