RIGHTWAY ASIA

FREEZER | Countertop Freezers

UPRIGHT FREEZER

RNG 30

CUSTOMIZATION AVAILABLE
PERSONALIZZAZIONE DISPONIBILE

60 mm | L1 -18°C -15°C | C ENERGY CLASS | 3 +25°C/60RH | LED | GAS R290

DETAILS

General features

21 Lt. Upright freezer	•
Aluminium for internal and grey coated steel for external side	•
Static Cooling	•
Manual Defrost	•
Foaming Agent Cyclopentane (60mm per side)	•
Removable Gasket	•
Inner vertical LED light (with independent switch)	•
Door: Self closing and heated glass (Not reversable)	•
Digital thermometer display	•
Painted aluminium door frame with integrated handle	•
Lock fitted as standard	•
Adjustable shelves: 1 Pcs	•
N.4 Adjustable feet	•
Energy efficiency class: C	•

PRODUCT DIMENSIONS

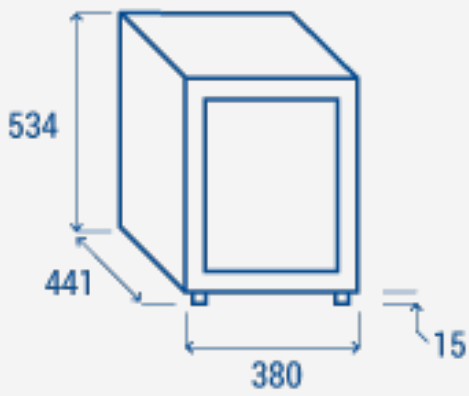

Technical specifications

Capacity	**30 L**
Temperature	**L1 (-15°C--18°C)**
Consumption	**2.97 kWh/24h**
Rated Power	**135 W**
Noise level	**42 dB(A)**
Net Weight	**23 Kg**
Gross Weight	**25 Kg**
External Dimensions (WxDxH mm)	**380x441x534**
Internal Dimensions (WxDxH mm)	**260x280x370**
Packaging dimensions (WxDxH mm)	**455x517x600**
Loading quantities 20'/40'/40'HQ	**144/312/416**

CERTIFICATION

CE RoHS

RIGHTWAY ASIA
We make the world a cooler place