RIGHTWAY ASIA

ABS | Upright Cabinets

REFRIGERATED UPRIGHT ▶ GLASS DOOR ▶ WHITE PAINTED

URG 2

GAS R600a | 70 mm | B ENERGY CLASS | 3 CLIMATIC CLASS | 36°C | LED

DETAILS

Main switch, light switch and digital thermostat fitted as standard

Foamed door handle

Lock fitted as standard

Double vertical LED light along inner door profile

Shelf with small distance between the line and bottom shelf fittes as standard

Inner assistance fan

General features

200 Lt. Refrigerated upright (GLASS DOOR)	•
White external cabinet, thermoformed internally	•
Roll-bond evaporator system with fan assisted cooling	•
Automatic compressor cycle defrost	•
Foaming Agent Cyclopentane (70mm per side)	•
Double safety tempered glass with Low-e (Low emissivity glasses)	•
Digital Thermostat	•
Independent back-lit main and lights switches (White color)	•
Double vertical LED light along door profile	•
Removable Gasket and handle along door profile	•
Doors lock fitted as standard	•
Adjustable shelves: 2 Pcs + 1 BOTTOM Shelf	•
N.2 Adjustable feet + N.2 Rollers at the back	•
Energy efficiency class: B	•

PRODUCT DIMENSIONS

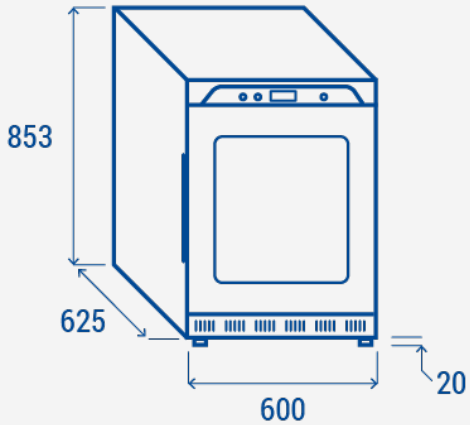

Technical specifications

Capacity	**200 L**
Temperature	**+2°C ~ +10°C**
Consumption	**1.36 kWh/24h**
Rated Power	**140 W**
Noise level	**52 dB(A)**
Net Weight	**45 Kg**
Gross Weight	**49 Kg**
External Dimensions (WxDxH mm)	**600x625x853**
Internal Dimensions (WxDxH mm)	**458x465x603**
Packaging dimensions (WxDxH mm)	**640x660x890**
Loading quantities 20'/40'/40'HQ	**54/108/162**

CERTIFICATION

CE RoHS

RIGHTWAY ASIA
We make the world a cooler place